Items	BN125-A1 ~ A2	BN125-A3 ~ A4	BN125-A5 ~ A7
Dimensions			
Overall length	2 150 mm (84.6 in.)		
Overall width	780 mm (30.7 in.)		
Overall height	1 020 mm (40.2 in.)	1 035 mm (40.8 in.)	← 1 050 mm (41.3 in.) (US, CA) 1 045 mm (41.1 in.) BN125-A7 ~ (N, NU)
Wheelbase	1 470 mm (57.9 in.)		
Road clearance	145 mm (5.7 in.)	160 mm (6.3 in.)	← 155 mm (6.1 in.) (US, CA)
Seat height	680 mm (26.8 in.)		
Dry mass	128 kg (1 255 N, 282 lb)	135 kg (1 323 N, 298 lb) 132 kg (1 294 N, 291 lb) (US): (BN125-A4 ~)	
Curb mass:			
Front	64 kg (628 N, 141 lb)		← 66 kg (647 N, 146 lb) (CAL) 65 kg (637 N, 143 lb) (BN125-A7 ~, N, NU)
Rear:	80 kg (785 N, 176 lb)	84 kg (824 N, 185 lb) 81 kg (794 N, 179 lb): (BN125-A4, US, CA)	← ← 82 kg (804 N, 181 lb) (CAL) 83 kg (814 N, 183 lb) (BN125-A7 ~, N, NU)
Fuel tank capacity	13 L (3.43 US gal)		
Performance			
Minimum turning radius	2.5 m (8.2 ft.)		
Engine			
Type	4-stroke, SOHC, 1-cylinder		
Cooling system	Air-cooled		
Bore and stroke	55 × 52.4 mm (2.2 × 2.1 in.)		
Displacement	124 cm³ (4.19 US oz.)		
Compression ratio	9.6 : 1		
Maximum horsepower	8.8 kW (12 PS) @9 500 r/min (rpm), (US) –		← 8.5 kW (11.6 PS) @9 500 r/min (rpm) (BN125-A7 ~, N, NU)

Classic Cycles Technical Resources

Items	BN125-A1 ~ A2	BN125-A3 ~ A4	BN125-A5 ~ A7
Maximum torque	9.7 N·m (0.99 kgf·m, 7.2 ft·lb) @8 000 r/min (rpm) (US)–		← 9.8 N·m (1.00 kgf·m, 7.2 ft·lb) @8 000 r/min (rpm) (BN125-A7 ~, N, NU)
Carburetion system	Carburetor, MIKUNI BS28		
Starting system	Electric starter		
Ignition system	DC-CDI		
Timing advance	Electronically advanced (analog)		
Ignition timing	From 10° BTDC @1 300 r/min (rpm) to 30° BTDC @4 500 r/min (rpm)		← From 10° BTDC @1 300 r/min (rpm) to 35° BTDC @4 500 r/min (rpm) (US, CA, CAL)
Spark plug	NGK CR7E	← NGK CR7E or U22ESR-N: (BN125-A4 ~, US, CA)	
Valve timing:			
Inlet:			
Open	23° BTDC		
Close	57° ABDC		
Duration	260°		
Exhaust:			
Open	64° BBDC		
Close	16° ATDC		
Duration	260°		
Lubrication system	Forced lubrication (wet sump)		
Engine oil:			
Grade	SE, SF or SG	←(BN125-A3) API SE, SF or SG API SH or SJ with JASO MA	
Viscosity	SAE10W-40		
Capacity	1.4 L (1.48 US qt) (when engine is completely dry)		
Drive Train			
Primary reduction system:			
Type	Gear		
Reduction ratio	3.666 (77/21)		
Clutch type	Wet multi disc		
Transmission:			
Type	5-speed, constant mesh, return shift		

Items			
Gear ratios:			
1st	2.700 (27/10)		
2nd	1.705 (29/17)		
3rd	1.300 (26/20)		
4th	1.090 (24/22)		
5th	0.952 (20/21)		
Final drive system:			
Type	Chain drive		
Reduction ratio	3.066 (46/15)		← 2.800 (42/15) (BN125-A7 ~, N, NU)
Overall drive ratio	10.708 @Top gear		← 9.778 @Top gear (BN125-A7 ~, N, NU)
Frame			
Type	Double cradle		
Caster (rake angle)	34°		
Trail	121 mm (4.8 in.)	← 119 mm (4.7 in.): BN125-A4 ~ (US, CA)	
Rim Size:			
Front	17 × 1.85		
Rear	15 × 2.75		
Front tire:			
Type	Tube type		
Size	90/90-17 M/C 49P		
Rear tire:			
Type	Tube type		
Size	130/90-15 M/C 66P		
Front suspension:			
Type	Telescopic fork		
Wheel travel	130 mm (5.1 in.)		140 mm (5.5 in.)
Rear suspension:			
Type	Swingarm		
Wheel travel	60 mm (2.4 in.) 75 mm (3.0 in.) (BN125-A2 ~)		80 mm (3.1 in.)
Brake type:			
Front	Single disc		
Rear	Drum		
Electrical Equipment			
Battery	12 V 9 Ah		
Headlight:			
Type	Semi-sealed beam		
Bulb	12 V 60/55 W		

Classic Cycles Technical Resources

Items	BN125-A1 ~ A2	BN125-A3 ~ A4	BN125-A5 ~
Trail/brake light	12 V 5/21 W		
Alternator:			
Type	Single-phase AC		
Rated output			
	8.75 A/12 V @4 000 r/min (rpm): BN125-A1		
	15 A/14 V @8 000 r/min (rpm): BN125-A2 ~		

Specifications subject to change without notice, and may not apply to every country.

(CA): Canada Model
(US): United States Model
(N): No Catalytic Converter
(NU): No Catalytic Converter (United Kingdom Model)

Technical Information-DC-CDI (Direct Current-Capacitor Discharge Ignition System)

Description

○Unlike the conventional CDI, the DC-CDI uses a battery instead of a magneto as a power source.
○The DC-CDI powered by a battery generates strong ignition spark even at low engine speeds. The conventional CDI, which uses AC voltage supplied by an exciter coil, generates less ignition spark at low engine speeds.
○The DC-CDI has a built-in DC-DC converter which changes battery voltage or battery-changing voltage into high voltage AC. Even if the battery loses its charge, the DC-CDI can use battery-charging voltage.
○The DC-CDI doesn't have an exciter coil, a power consumer, therefore the battery is charged better.

Ignition System

The DC-CDI is connected as shown.

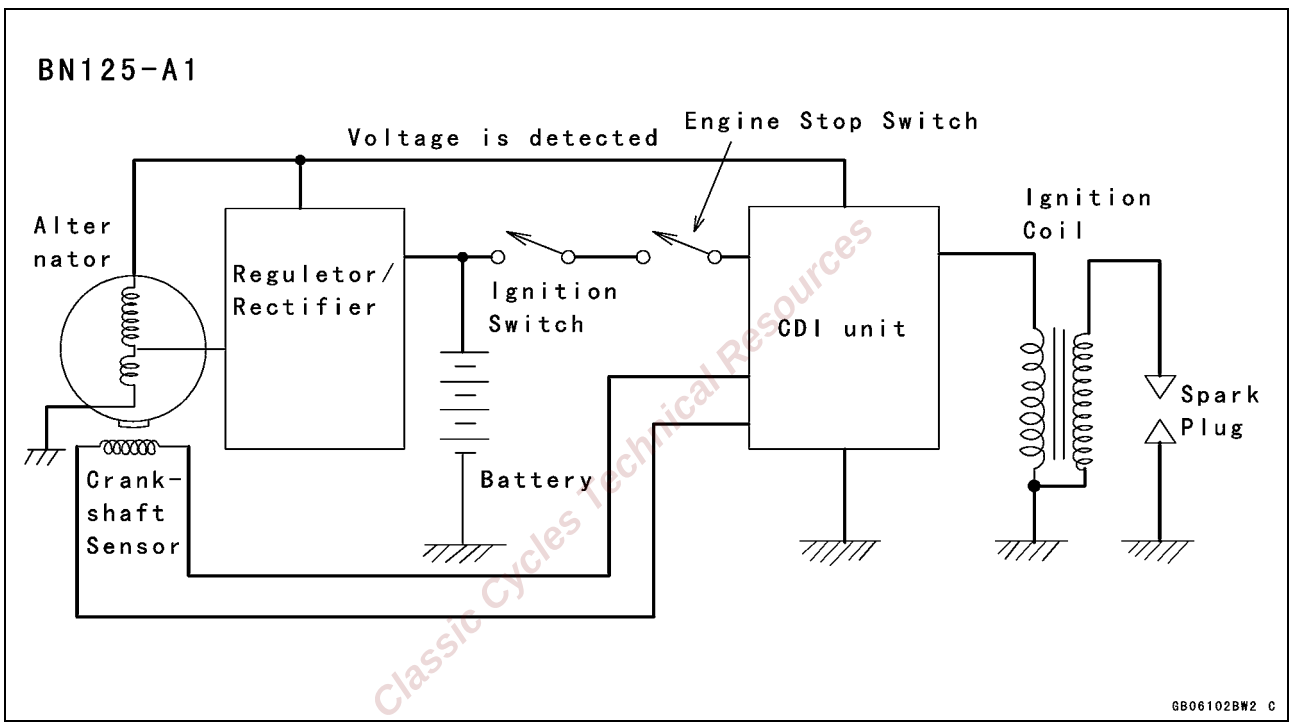

Classic Cycles Technical Resources

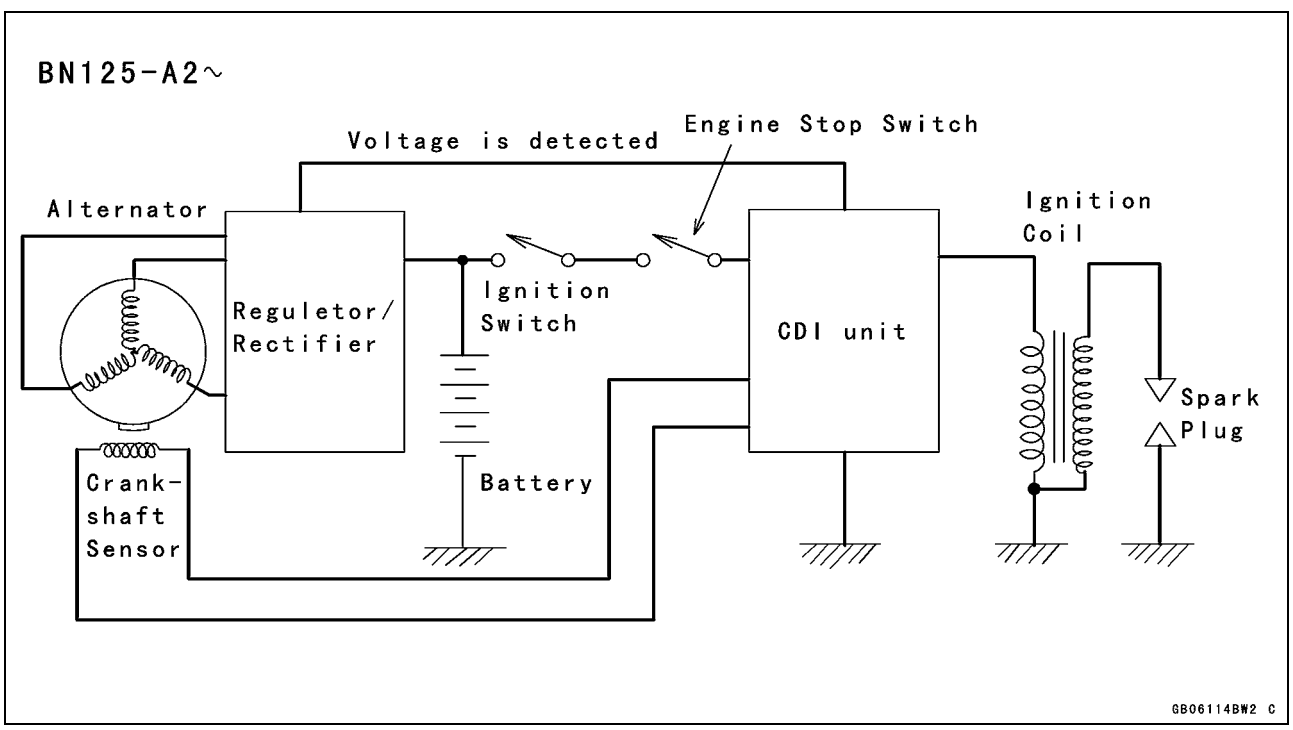

Technical Information-DC-CDI (Direct Current-Capacitor Discharge Ignition System)

Operation

The DC-CDI circuit consists of a battery , a DC-DC converter, a diode, a capacitor, an ignition timing controller, a crankshaft sensor, a thyristor, an ignition coil, a spark plug, an ignition switch, and an engine stop switch. If the ignition switch or the engine stop switch is turned to the OFF position, the battery power supply is cut off, and no spark is generated.

The DC-DC converter in the CDI unit has a built-in transformer, which changes 12 V battery voltage or battery-charging voltage into AC voltage. The diode converts the AC voltage into about 225 V DC to charge the capacitor.

First step-Charging the Capacitor

The converter generates the current to charge the capacitor through the diode with 225 V DC. During this process, the current changes slowly through the primary coil winding so that the secondary coil winding goes not produce enough voltage to fire the spark plug.

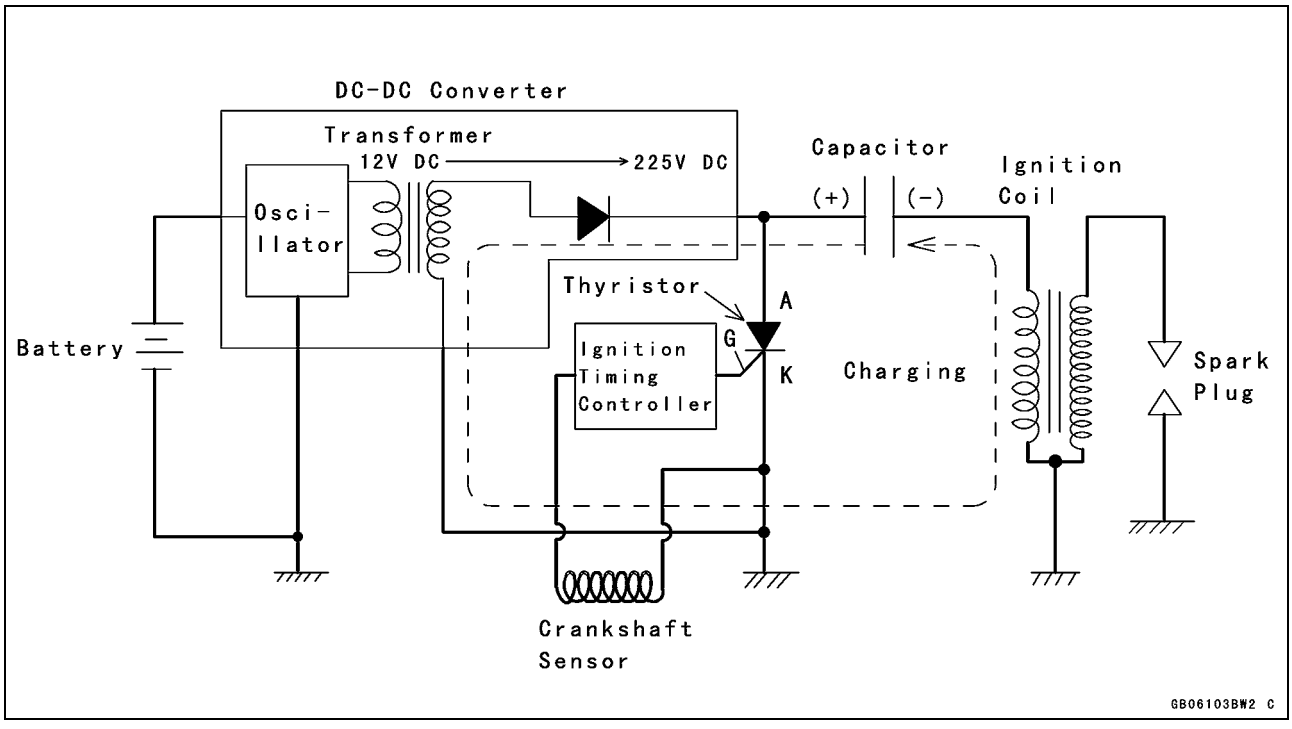

Second step-thyristor conducts

After charging, the crankshaft sensor and ignition timing controller send a trigger signal to the gate through the cathode (K → G in the figure) in the thyristor. When this happens, the current flows from the cathode to the anode (K → A) in the thyristor.

Third step-Surging current into the Primary Winding

When the thyristor conducts, the charge stored in the capacitor is released suddenly, flowing through the primary winding, back through the thyristor to the capacitor.

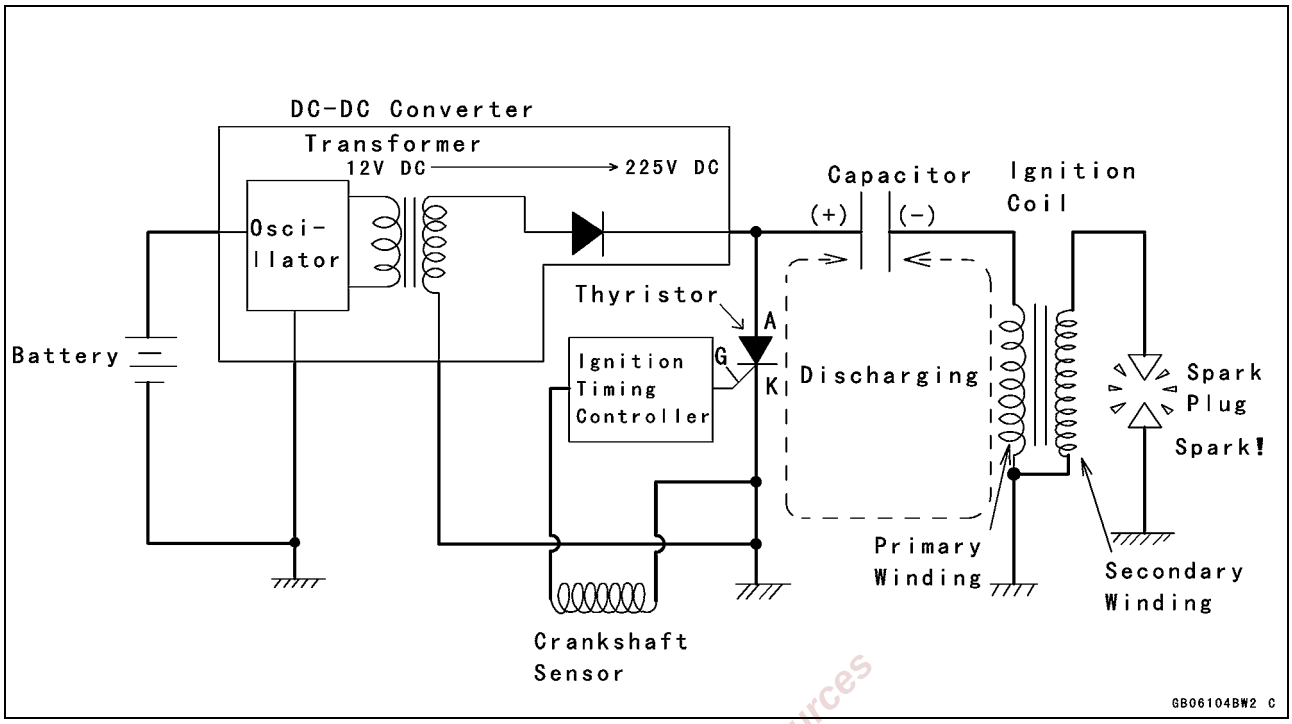

This sudden change in the primary current induces a primary voltage (counterelectromotive force) which is equal to the capacitor voltage (about 225 V) but against the discharging current. The primary voltage induces a high secondary voltage in the secondary coil, generating spark plug gap. The secondary voltage multiplied by winding ratio (about 90 : 1) reaches about 20 000 V.

Final step-Thyristor resets

After the charge stored in the capacitor is completely released, the cathode to anode voltage is removed in the thyristor and the thyristor stops conducting and automatically resets. Then, the DC-DC converter charges the capacitor again and operation returns to first step.

Classic Cycles Technical Resources

The control of Ignition Timing

Since the ignition timing is electronically advanced or retarded, this system has no mechanical parts such as a cam or contact breakers and there are no parts to wear out and no periodic maintenance is required. So, there is never any need to adjust the timing once it has been installed correctly.

Generally, the spark plug must be fired at a proper crank angle before top dead center (BTDC).

At low and mid-range engine speeds, the faster the engine runs, the further the ignition timing advances. This prevents knocking and preignition, and provides better engine performance.

If the engine speed increases further, no timing advance is required because the engine can breathe in and burn the fuel/air mixture in a shorter time. The ignition timing does not increase further and the timing advance stops. This also provides better engine performance and prevents the engine from overrunning and overheating.

The operation of a diode and thyristor is explained here in order to describe how the ignition timing is controlled.

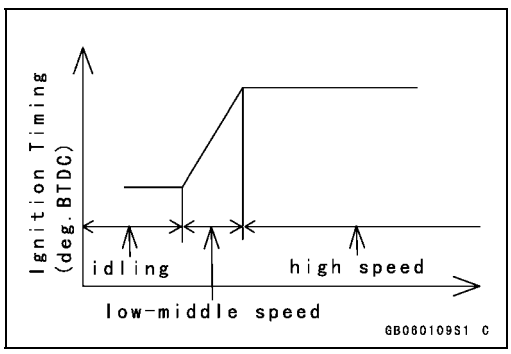

Technical Information-DC-CDI (Direct Current-Capacitor Discharge Ignition System)

Diode

A diode functions as an electrical check valve. It conducts current easily from its cathode to its anode, but it will not permit current flow in the opposite direction. Since electricity attempts to flow from negative (–) to positive (+), a circuit with a done will conduct current only when the polarity is correct, i.e., when the negative charge is applied to the diode's cathode.

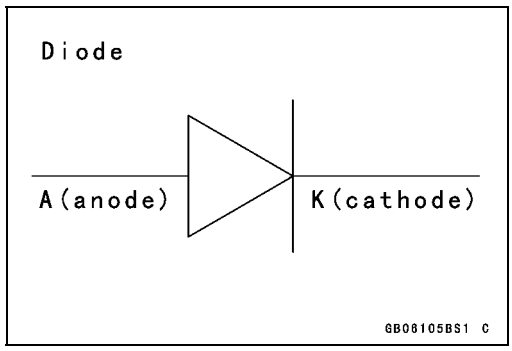

NOTE

○ *This manual doesn't use the conventional current flow concept, but the electron theory current flow concept; current is supposed to flow negative (–) to positive (+) in this text.*

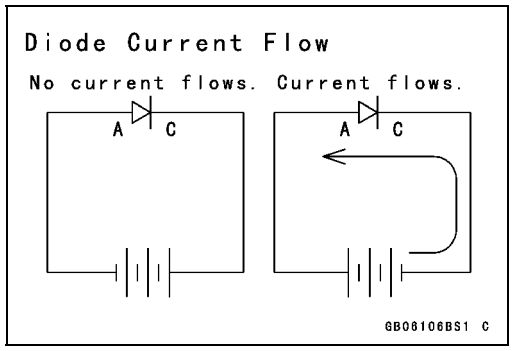

Thyristor (SCR)

Current will flow from the cathode to anode but will not flow in the reverse direction. The thyristor differs from a diode in two respects: (a) even though a voltage of the correct polarity-negative to cathode-may be applied, the thyristor will not conduct until a signal is applied to the gate input lead; (b) once started, it will not stop conducting (even if the gate lead signal voltage stops) until the cathode to anode voltage is removed or reversed.

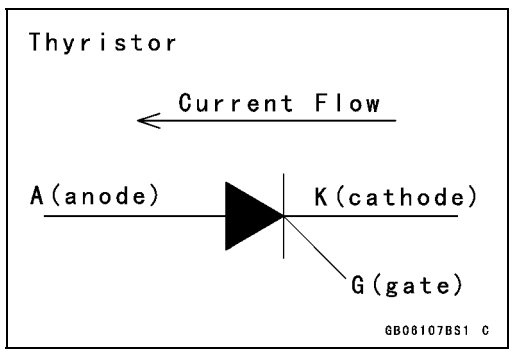

The crankshaft sensor is installed on the alternator cover so that it will be close to the alternator rotor. One side of the crankshaft sensor core has a permanent magnet and the other side has a coil to signal the CDI unit.

Crankshaft Sensor [A]
Alternator Rotor [B]
Timing Plate [C]
Output Voltage [D]

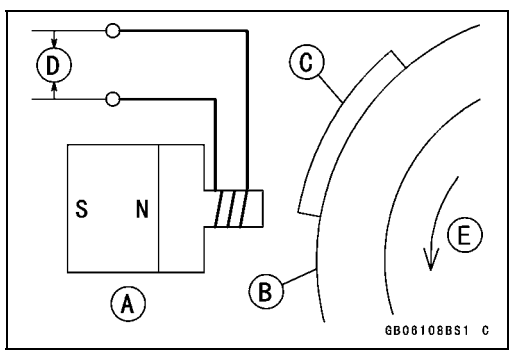

Technical Information-DC-CDI (Direct Current-Capacitor Discharge Ignition System)

Every time either end of the timing plate on the rotor passes by the crankshaft sensor, a pulse is generated and sent to the CDI unit, that is, two pulses are generated per one revolution of the rotor. One is a positive pulse [A] and the other is a negative pulse [B].

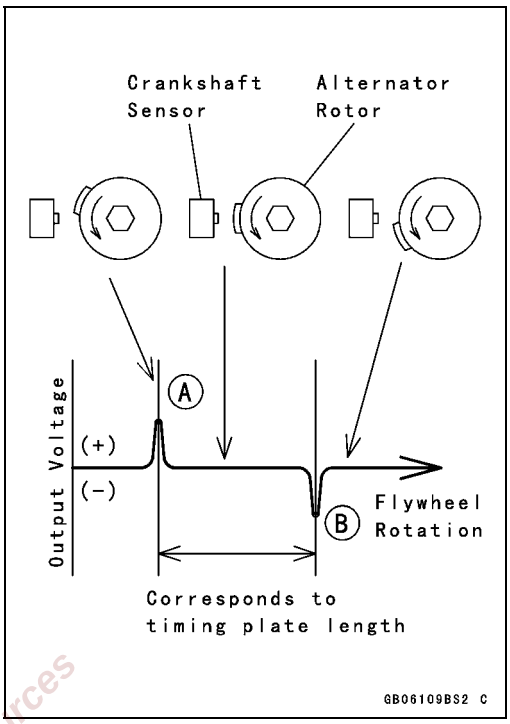

The crankshaft sensor, a signal generator, and voltage comparators determine the ignition timing in the ignition timing controller. The power supply circuit is the power source for the signal generator and the voltage comparators.

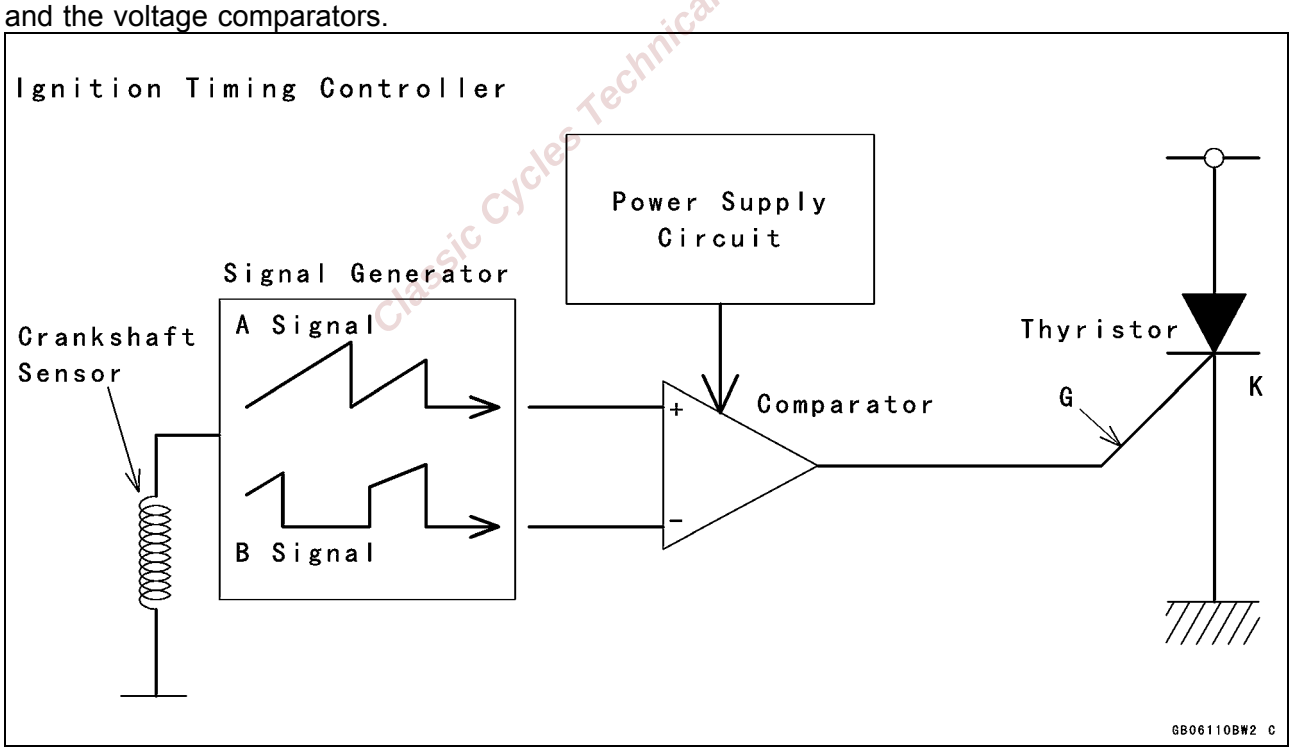

Classic Cycles Technical Resources

The crankshaft sensor generates a crankshaft sensor signal and sends it to the signal generator. The signal generator generates A and B signals synchronized with the crankshaft sensor signal. These signals are shown in the figure.

That is to say, the signal generator changes the crankshaft sensor signal into A and B signals.

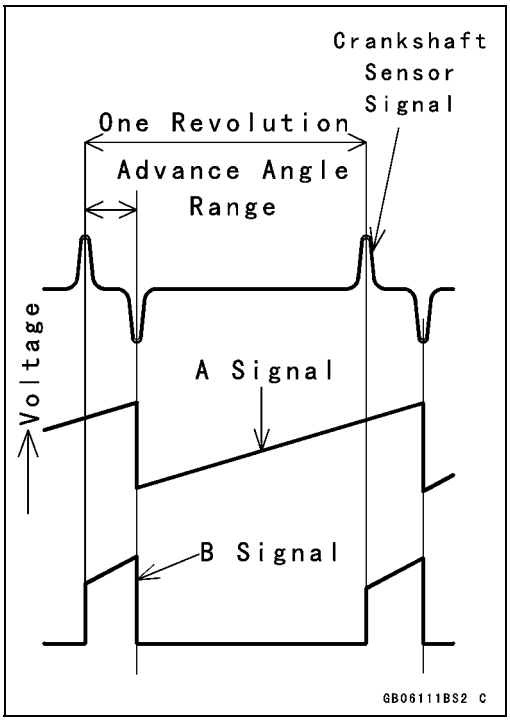

(Ignition Timing Advancing)

A signal and B signal in the comparator advance the ignition timing.

The signal generator decreases A signal as the engine rpm increases from N1, to N3 as shown, but keeps B signal unchanged.

A and B signals are shown with the signals overlapped.

The comparator compares A signal with B signal. When A signal voltage becomes equal to or less than B signal voltage, the comparator sends a trigger signal to the gate in the thyristor, firing the spark plug.

The intersection point between A and B signals indicates the timing when the spark plug fires. This point moves left (the timing advances) as the engine rpm increases from N1 to N3 as shown.

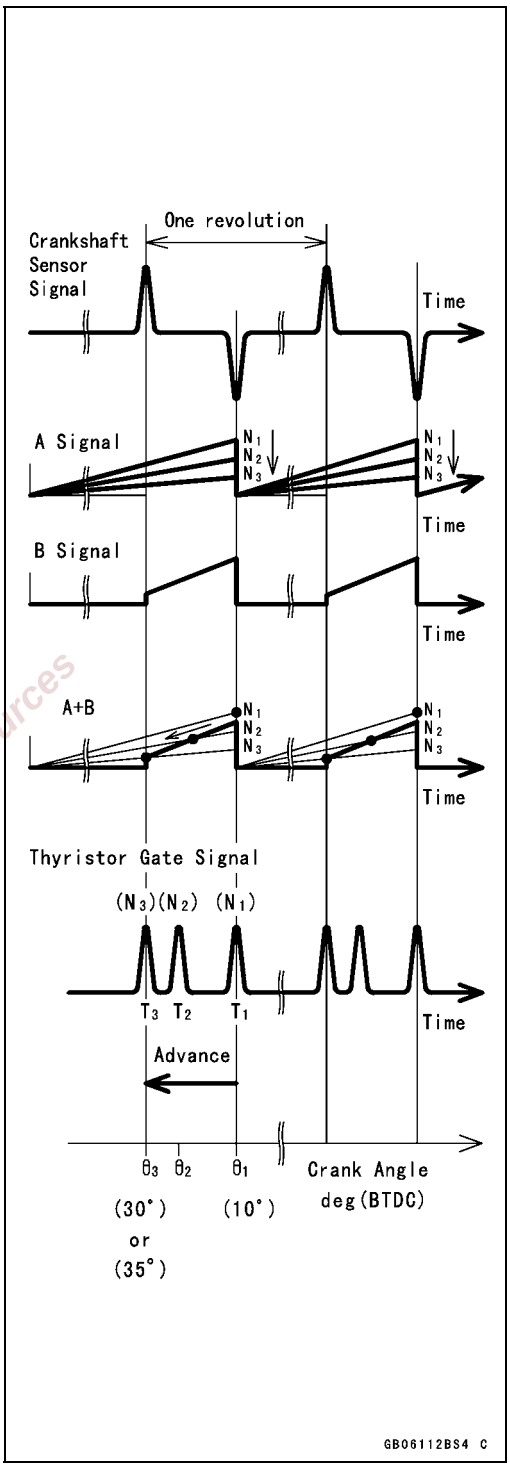

Classic Cycles Technical Resources

Before or after advancing period, the ignition timing is determined by the crankshaft sensor signal and the ignition timing remains constant.

The figure shows the advancing chart.

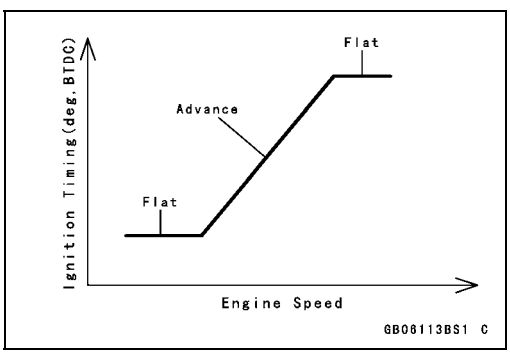

Enricher

The coasting enricher [A] prevents backfiring during engine braking by supplying a rich fuel mixture to the engine.

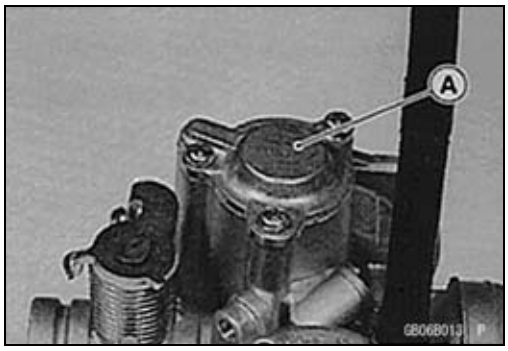

When the motorcycle is cruising or accelerating, the engine vacuum is low, and the return spring [3] pushes the valve in its opened position [5]. The passage [6] is open and the air runs through the pilot jet [7] for better atomization.

During engine braking, a high vacuum is generated behind the butterfly valve [11]. This draws the diaphragm [2] against the return spring [3] to close the valve [12], and then the passage [6]. The mixture becomes rich to prevent backfiring because the amount of air is reduced.

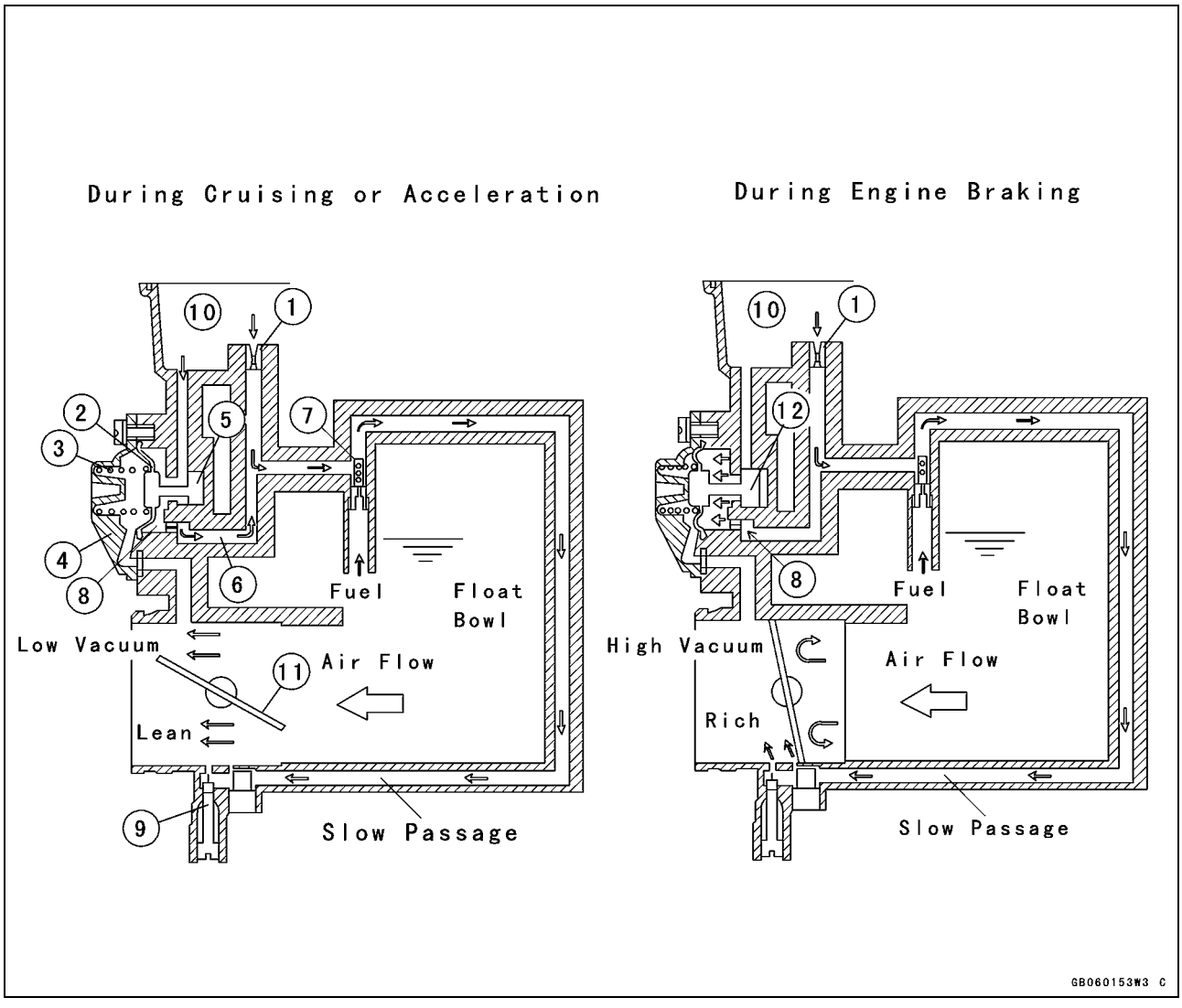

1. Pilot Air Jet 1
2. Diaphragm
3. Return Spring
4. Cover
5. Valve Opened
6. Passage
7. Pilot Jet
8. Pilot Air Jet 2
9. Pilot Screw
10. Air Cleaner Housing
11. Butterfly Valve (Throttle Valve)
12 Valve Closed

Fuel and Air Supply of Enricher System

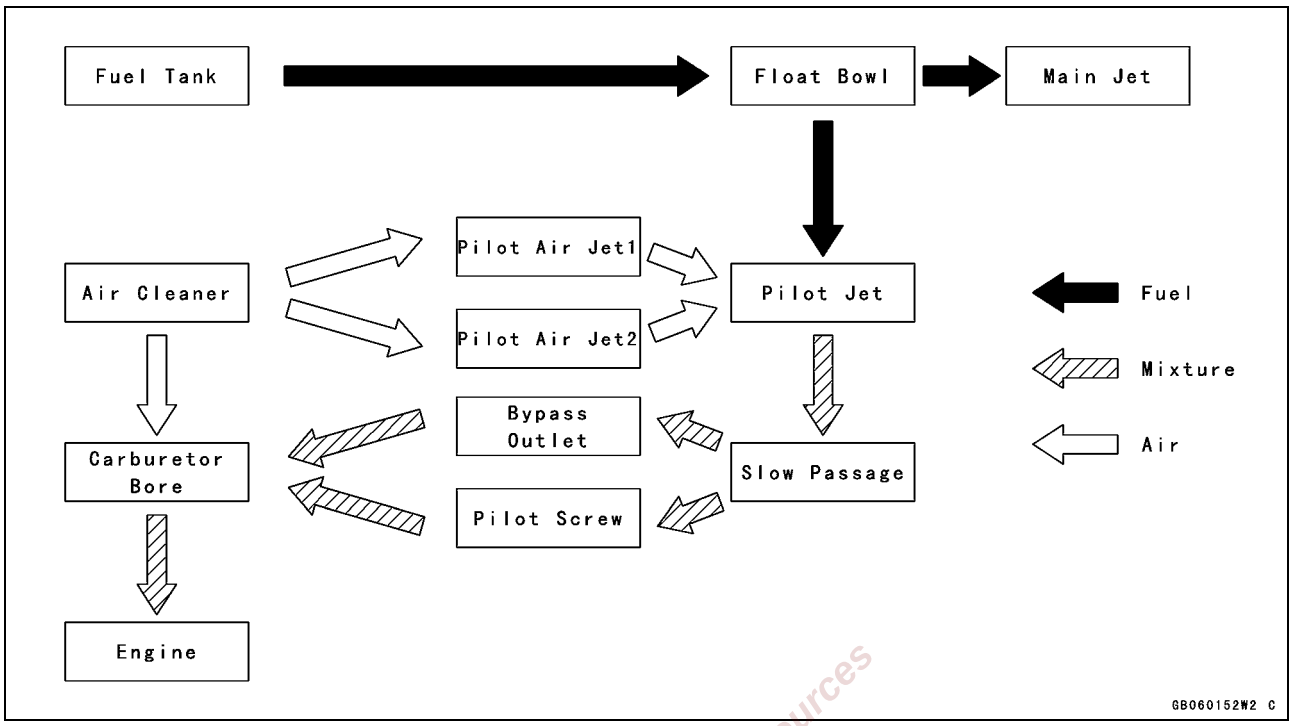

Classic Cycles Technical Resources

Unit Conversion Table

Prefixes for Units

Prefix	Symbol	Power
mega	M	× 1 000 000
kilo	k	× 1 000
centi	c	× 0.01
milli	m	× 0.001
micro	μ	× 0.000001

Units of Mass

kg	×	2.205	=	lb
g	×	0.03527	=	oz

Units of Volume

L	×	0.2642	=	gal (US)
L	×	0.2200	=	gal (imp)
L	×	1.057	=	qt (US)
L	×	0.8799	=	qt (imp)
L	×	2.113	=	pint (US)
L	×	1.816	=	pint (imp)
mL	×	0.03381	=	oz (US)
mL	×	0.02816	=	oz (imp)
mL	×	0.06102	=	cu in

Units of Force

N	×	0.1020	=	kg
N	×	0.2248	=	lb
kg	×	9.807	=	N
kg	×	2.205	=	lb

Units of Length

km	×	0.6214	=	mile
m	×	3.281	=	ft
mm	×	0.03937	=	in

Units of Torque

N·m	×	0.1020	=	kgf·m
N·m	×	0.7376	=	ft·lb
N·m	×	8.851	=	in·lb
kgf·m	×	9.807	=	N·m
kgf·m	×	7.233	=	ft·lb
kgf·m	×	86.80	=	in·lb

Units of Pressure

kPa	×	0.01020	=	kgf/cm²
kPa	×	0.1450	=	psi
kPa	×	0.7501	=	cm Hg
kgf/cm²	×	98.07	=	kPa
kgf/cm²	×	14.22	=	psi
cm Hg	×	1.333	=	kPa

Units of Speed

km/h	×	0.6214	=	mph

Units of Power

kW	×	1.360	=	PS
kW	×	1.341	=	HP
PS	×	0.7355	=	kW
PS	×	0.9863	=	HP

Units of Temperature

$$\frac{9(°C+40)}{5} - 40 = °F \qquad \frac{5(°F+40)}{9} - 40 = °C$$

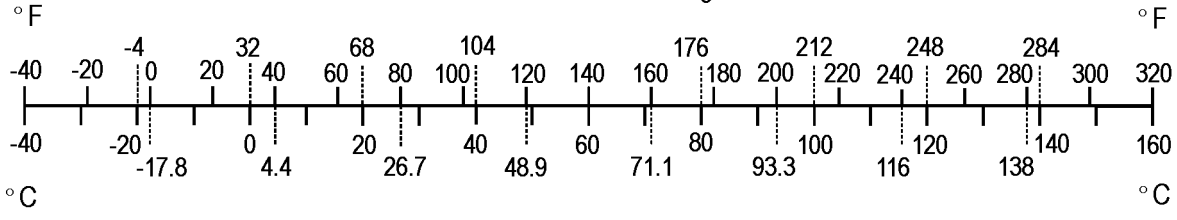

KAWASAKI PARTS & ACCESSORIES

Click on links below

Kawasaki BN125 Original Equipment Parts & Complete Online Diagrams

Kawasaki BN125 Model History & Technical Specifications

Motorcycle Helmet Closeout Sale

Kawasaki Motorcycle Parts & Accessories

Kawasaki Dirt Bike Parts & Accessories

Save On All Motorcycle Tires

Motorcycle Gear Closeout Sale

High Visibility Motorcycle Gear

Cycle Gear – Free Shipping

Free Shipping On All Motorcycles

Discount Auto Parts – Free Shipping